Date	Fixture	Project	Quantity
	Edge Tri-Flat Linear		

EDGE

Tri-Curve Linear

The Edge Tri-Curve combines a distinctive curved linear form with high-performance illumination.

Multiple mounting and power options provide flexibility across a wide range of applications.



Product Specifications

Performance
- Efficacy: 177 Lm/W
- Total Output: 15,930 lm
- Max Watts: 90W
- CRI: 80, 90
- CCT: 2700K - 6500K
- Life Hours: TM 21 L90>71,000

Construction
- Fabricated steel housing
- Aluminum extrusion
- Frosted acrylic PMMA lens
- Precision-fit end caps prevent light leakage

Power Type
- Class 2 Integral Line-Voltage 120/277V
- 10W onboard EM Battery Backup
- Remote Distributed Low Voltage (RDU unit)
- Power over Ethernet (PoE)

Ambient Operating Temperature
- Integral: –20°C to 55°C
- Integral EM: 0°C to 45°C (4–6 ft); 0°C to 50°C (8 ft)
- Remote & PoE: –30°C to 70°C (all sizes)

See Ambient Temperature Table

Distribution
(Single Channel)
- 15.9% Indirect
- 84.1% Direct

Finishes
- White
- Black

Mounting
- Pendant
- Unistrut
- Surface
- Quick Unistrut Clips
- Angled Brackets: 45°, 90°, 135°

Additional Features
- High Output Driver
- Replaceable Driver
- 0-10V Dimming Down to 1%
- Various Sensor Options
- Egress Lighting Option with 10W backup battery max mounting height of 22 ft

Certifications & Standards
- UL 1598: Luminaires
- UL 924: Emergency Lighting and Power Equipment
- UL 2108: Low Voltage Lighting Systems
- UL Certified for Elevated Ambient Operating
- IDCA Certified — G2 Applicable
- Title 24 Compliant
- Suitable for Damp Locations

Compliance
- TAA
- BAA
- BABA

Environmental
- 100% Recycled Aluminum
- Recyclable Acrylic
- Declare
- EPD-LCA Smart Certified

Warranty
- 5-Year
- Upgradeable to 10-year w/wo drivers

© LANTANA LED All Rights Reserved

Specifications are subject to change without notice. LANTANA LED assumes no responsibility for the use or interpretation of this information. For the most current product information, please visit LANTANALED.com.

ETCL										
Series	Power	Size	Mounting	Lumen Package	CCT	CRI	Controls	Cord	Feed Location	Finish

Ordering Guide

Sample Con iguration: ETCL - I - 4 - U - L40 - 40 - 80 - N - PC - TFC - W

Series / Type		Power		Size		Mounting	
ETCL -	Edge Tri-Curve Linear	**- I**	Integral	**- 4**	4 ft - 10443lm / 59W Max	**- P**	Pendant
		- IEM	Integral EM (10W) Battery	**- 6**	6 ft - 10443lm / 59W Max	**- U**	Unistrut
		- R	Remote *	**- 8**	8 ft - 15930lm / 90W Max	**- S**	Surface
		- POE	Power over Ethernet (comes with PoE Sensor)**			**- UC**	Unistrut Quick Clip
						- 45/135/90B	Bracket
			* RDU ordered separately ** When POE is selected, skip Controls / Cord / Feed Location			**- 45/135/90UCB**	Unistrut Quick Clip & Bracket

Lumen Output | Package			CCT		CRI		Controls	
- L#	**- L35 - L80**	4 ft - Standard (STD)	**- 27**	2700K	**- 80**	80+ CRI	**- N**	None
	- L85 - L105	4 ft - High Output (HO)	**- 30**	3000K	**- 90**	90+ CRI	**- 10V**	0-10V
	- L55 - L105	6 ft - Standard (STD)	**- 35**	3500K			**- LU**	Lutron Athena Wireless Node
	- L70 - L140	8 ft - Standard (STD)	**- 40**	4000K			**- WT**	Wattstopper FSP-202
	- L140 - L155	8 ft - High Output (HO)	**- 50**	5000K			**- NXHMO**	NXSMP High Mount Wired*
			- 65	6500K			**- NXLMI**	NX Low Mount Wired*
		Refer to the Lumen Tables on page 3 to select the desired lumen output (L#) and corresponding SKU.					**- LD**	LANTANA Dip Switch
							- LM	LANTANA Microwave*
								*Only available for I (integral), and IEM (Integral EM 10W Battery)

Cord		Feed Location		Finish	
- (Blank)	None	**- (Blank)**	N/A	**- W**	White
- PC	6 ft Power Cord (for integral - specify feed location)	**- TFC**	Top Feed Center	**- B**	Black
- MW	Modular Wiring (Integral)* Only available for I (integral), and IEM (Integral EM 10W Battery)	**- TFE**	Top Feed End		Note: End caps match luminaire finish
		- EF	End Feed		
		- SF1 / SF2 / SF3 / SF4	Side Feed - Specify location. See feed location diagram for positions 1 - 4 Example: SF3 = Side Feed, location 3 Note: See diagram for feed locations		

- Shaded selections indicate standard options | *Additional costs may apply for non highlighted items

Additional options include dimming transfer switches, emergency modular wiring with red cable, and the alternate Wattstopper FSP-202 ordering designation. Contact factory for ordering details.

© LANTANA LED All Rights Reserved

Specifications are subject to change without notice. LANTANA LED assumes no responsibility for the use or interpretation of this information. For the most current product information, please visit LANTANALED.com.

Edge Tri-Curve Linear

Performance

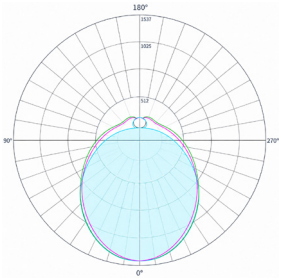

4000K | 80 CRI | 177 Lm/W

Zone (°)	Lumens	Luminaire
0-90	5850.1	84.1%
90-180	1106.0	15.9%

CCT	Multiplier 80 CRI	Efficacy Lm/W	Multiplier 90 CRI	Efficacy Lm/W
2700K	0.91	161	0.89	158
3000K	0.95	168	0.91	161
3500K	0.97	172	0.93	165
4000K	1.00	177	0.95	168
5000K	1.00	177	0.95	168
6500K	0.99	175	0.94	166

Lumen Packages

4': L35 - L75 | Standard Output

SKU	Nominal	Watts	Delivered
L35	3500	19	3363
L40	4000	22	3894
L45	4500	25	4425
L50	5000	28	4956
L55	5500	31	5487
L60	6000	33	5841
L65	6500	36	6372
L70	7000	39	6903
L75	7500	42	7434
L80	8000	45	7965

4': L80 - L100 | High Output

L85	8500	48	8496
L90	9000	50	8850
L95	9500	53	9381
L100	10000	56	9912
L105	10500	59	10443

6' | L55 - L100 | Standard Output

L55	5500	31	5487
L60	6000	33	5841
L65	6500	36	6372
L70	7000	39	6903
L75	7500	42	7434
L80	8000	45	7965
L85	8500	48	8496
L90	9000	50	8850
L95	9500	53	9381
L100	10000	56	9912
L105	10500	59	10443

8' | L70 - L135 | Standard Output

SKU	Nominal	Watts	Delivered
L70	7000	39	6903
L75	7500	42	7434
L80	8000	45	7965
L85	8500	48	8496
L90	9000	50	8850
L95	9500	53	9381
L100	10000	56	9912
L105	10500	59	10443
L110	11000	62	10974
L115	11500	64	11328
L120	12000	67	11859
L125	12500	70	12390
L130	13000	73	12921
L135	13500	76	13452
L140	14000	79	13983

8' | L140 - L155 | High Output

L140	14500	81	14337
L145	15000	84	14868
L150	15500	87	15399
L155	16000	90	15930

© LANTANA LED All Rights Reserved

Specifications are subject to change without notice. LANTANA LED assumes no responsibility for the use or interpretation of this information. For the most current product information, please visit LANTANALED.com.

Distribution

Direct | Indirect

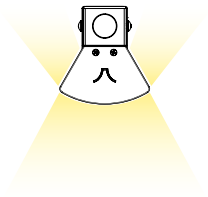

15.9% Indirect

84.1% Direct

Ambient Operating Temperature

Integral | Integral EM | Remote and PoE

Size	Integral	Integral EM	Remote and PoE
4 ft	-20°C to 55°C	0°C to 45°C	-30°C to 70°C
6 ft	-20°C to 55°C	0°C to 45°C	-30°C to 70°C
8 ft	-20°C to 55°C	0°C to 50°C	-30°C to 70°C

Feed Location

End | Top End | Top Center

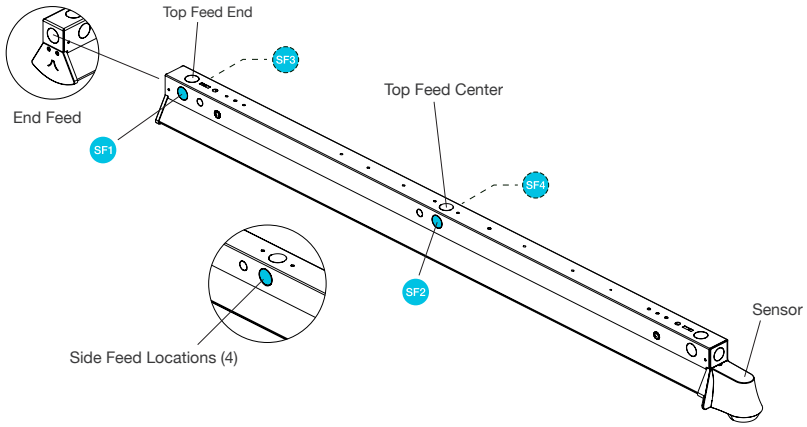

Standard Feed Locations

- Top Feed Center
- Top Feed End
- End Feed

Custom Side Feed locations - Please contact factory

SF1 SF2 - Side Shown

SF3 SF4 - Opposite Side (dashed leaders)

Modular Wiring

Integral

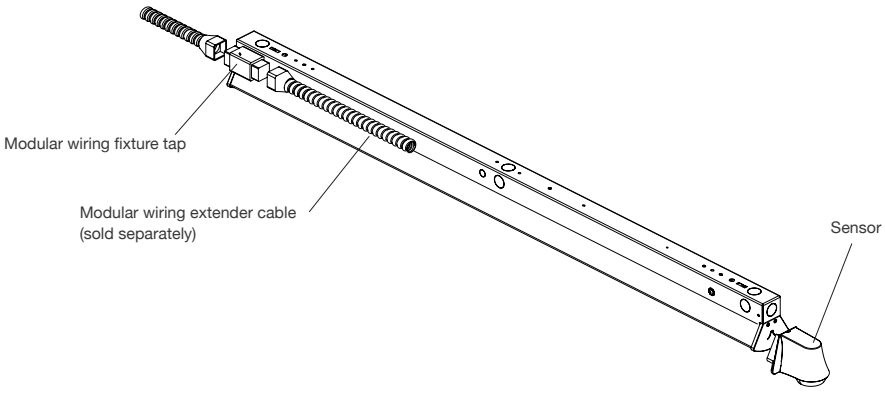

© LANTANA LED All Rights Reserved

Specifications are subject to change without notice. LANTANA LED assumes no responsibility for the use or interpretation of this information. For the most current product information, please visit LANTANALED.com.

Dimensions

Integral | Remote

Integral

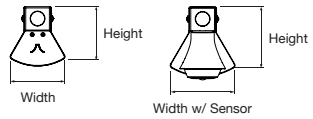

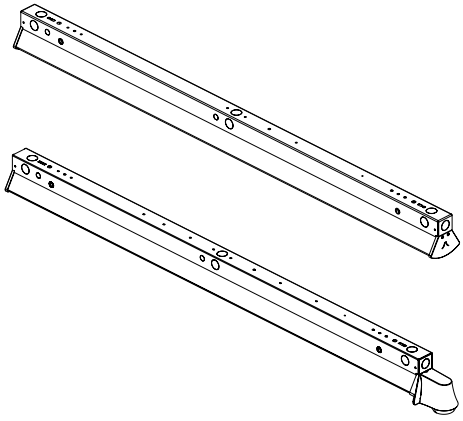

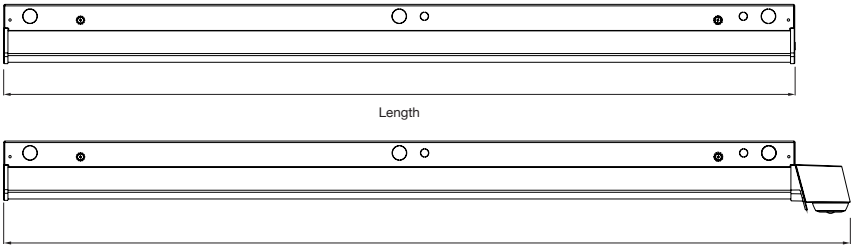

Integral	Length		Width		Height		Weight	
Size	IN	MM	IN	MM	IN	MM	LBS	KG
4'	47.1	1196	3.2	81	3.1	79	7	3.18
6'	70.4	1788	3.2	81	3.1	79	10	4.54
8'	93.2	2367	3.2	81	3.1	79	13	5.9
4' w/Sensor	51	1295	3.8	97	4.1	104	7.2	3.27
6' w/Sensor	74.3	1887	3.8	97	4.1	104	10.2	4.63
8' w/Sensor	97.17	2466	3.8	97	4.1	104	13.2	5.99

Remote

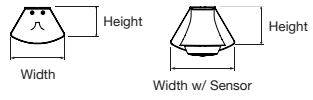

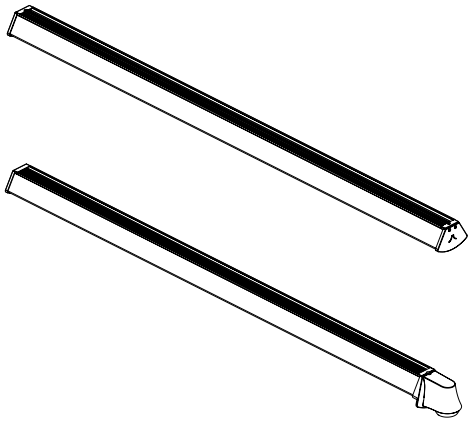

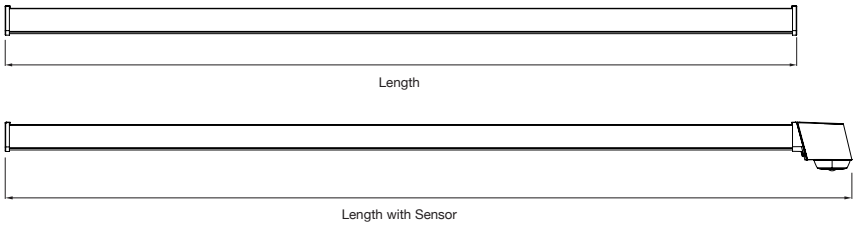

Remote	Length		Width		Height		Weight	
Size	IN	MM	IN	MM	IN	MM	LBS	KG
4'	47.1	1196	3.2	81	1.8	46	6	2.72
6'	70.4	1788	3.2	81	1.8	46	9	3.86
8'	93.2	2468	3.2	81	1.8	46	12	5.45
4' w/Sensor	51	1280	3.8	97	2.8	71	6.2	2.81
6' w/Sensor	74.3	1887	3.8	97	2.8	71	9.2	4.18
8' w/Sensor	97.17	1295	3.8	97	2.8	71	12.2	5.54

© LANTANA LED All Rights Reserved

Specifications are subject to change without notice. LANTANA LED assumes no responsibility for the use or interpretation of this information. For the most current product information, please visit LANTANALED.com.

Mounting Options - Integral

Surface | Unistrut | Pendant | Quick Clip with Angled Brackets

Surface

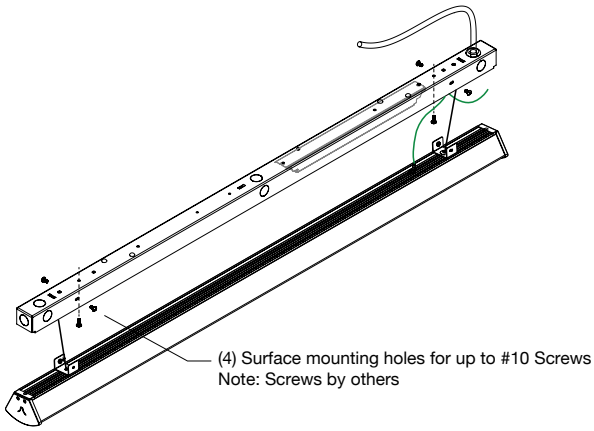

Unistrut

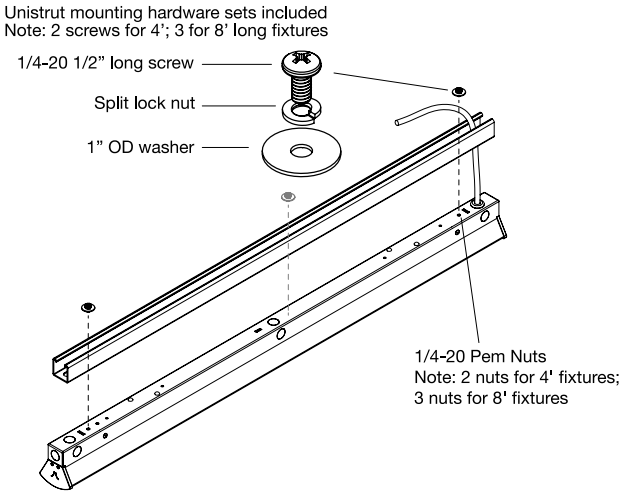

Pendant

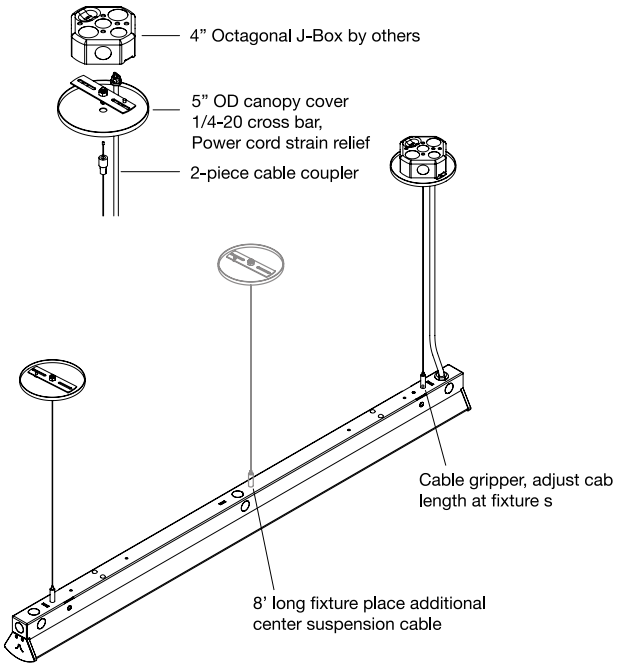

Quick Clip and Angled Brackets



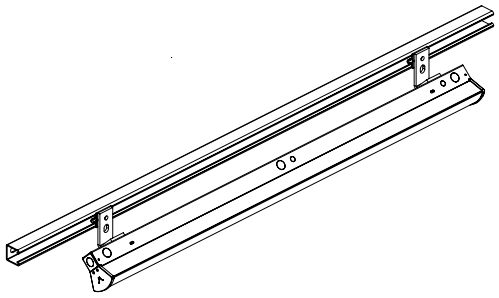

Model shown: Edge Tri-Curve Linear integral with 45° bracket

© LANTANA LED All Rights Reserved

Specifications are subject to change without notice. LANTANA LED assumes no responsibility for the use or interpretation of this information. For the most current product information, please visit LANTANALED.com.

Mounting Options - Remote

Surface | Unistrut | Pendant | Quick Clip with Angled Brackets

Surface

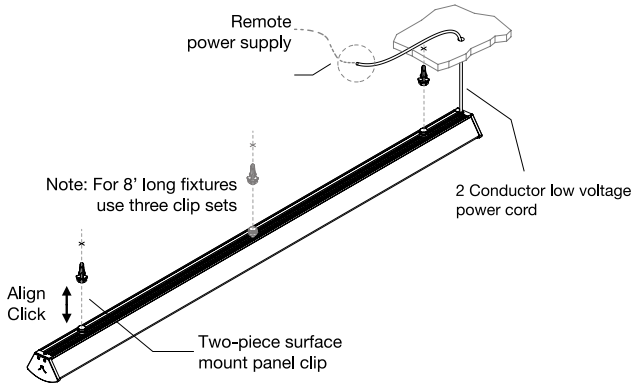

Unistrut

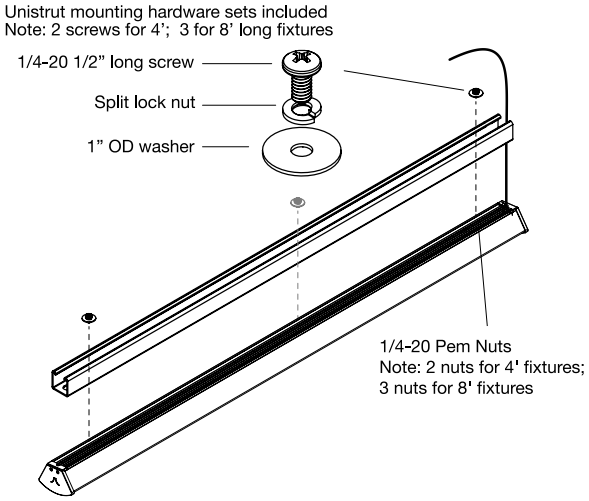

Pendant

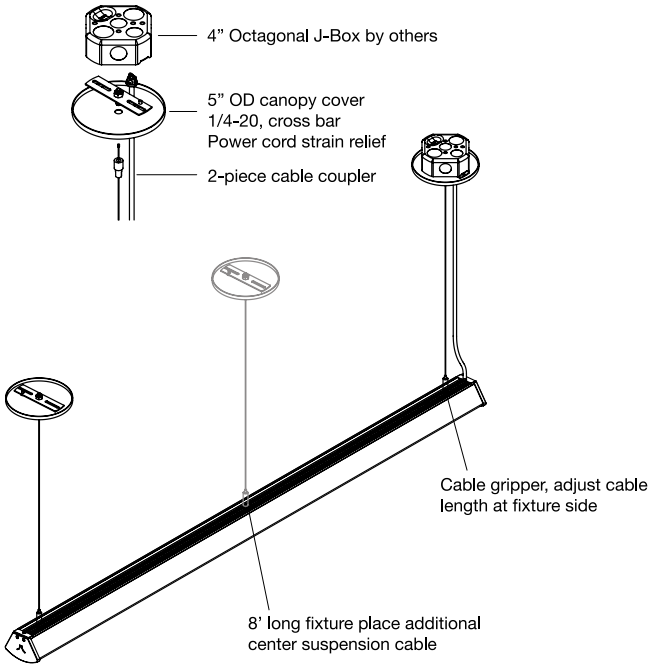

Quick Clip and Angled Brackets

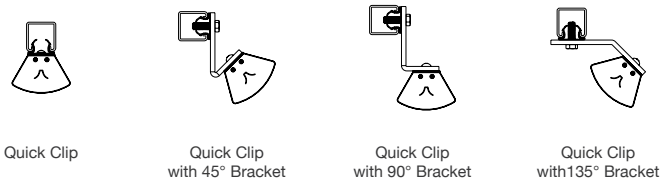

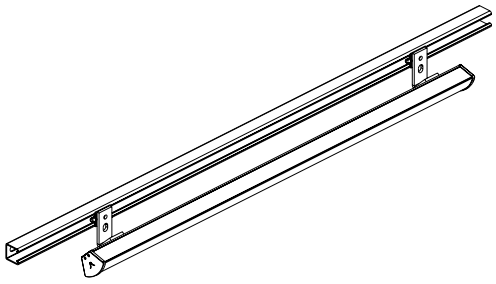

Model Shown: Edge Tri-Curve linear remote with 45° bracket

© LANTANA LED All Rights Reserved

Specifications are subject to change without notice. LANTANA LED assumes no responsibility for the use or interpretation of this information. For the most current product information, please visit LANTANALED.com.